Rack Technologies

PREFORMED LINE PRODUCTS

WRH6612

DATA SHEET

WR SERIES

* Image for illustration purpose only

The WR Series wall mounted cabinets are built to the highest standards with flexibility and ease of installation at the forefront of design criteria. More than 30 different size and door variants makes the WR Series one of the most comprehensive in the market.

The fully welded frame ensures a stable structure while the key lockable quick release door opens to 180 degrees and are available in Acrylic, Curved Perforated or Steel.

CABINET DIMENSION:	634H x 600W x 700D (incl. rear hinge)
REAR HINGE SECTION:	634H x 600W x 100D
COLOUR:	Black
WEIGHT:	26kg
SHIPPING DIMENSION:	674H x 640W x 740D
SHIPPING WEIGHT:	29kg
DESCRIPTION:	WRH Cabinet – 12RU 600W 700D Acrylic Door

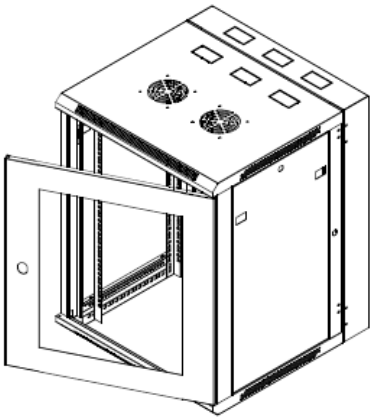

FEATURES

- Fully welded frame ensures stable structure
- Quick release door hinges
- Reversible Doors open to 180 degrees with quick release hinge
- Acrylic front door
- Doors flush with frame, Curved Perforated door protrudes 50mm
- 70% Perforation on perforated doors
- 19" depth adjustable mounting rail
- Side panels fitted with round locks are easy to fit and remove
- Top and bottom panel with multiple cable entry knockouts
- Rear panel with multiple cable entry knockouts
- Rear hinge section left or right side
- Rear hinge section key lockable
- Rear hinge section has 19" provisions

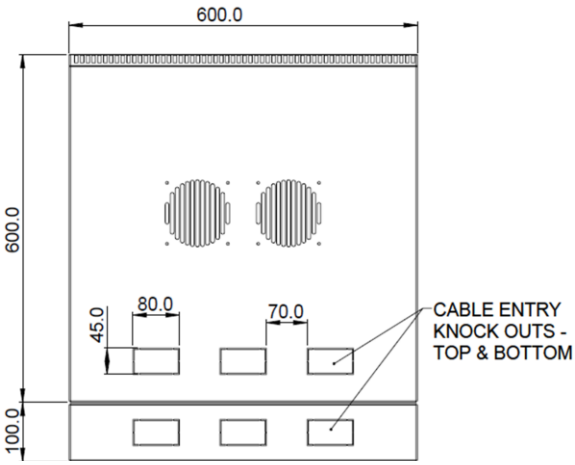

STANDARD INCLUSIONS

- 1 x Cantilever Shelf (1RU 300 depth cantilever)
- Key lock on front door
- Key locks on removable side panels
- Cable entry knockouts top, bottom and rear
- Fan vents in top
- Front & rear 19" mounting rails with RU marking
- Earthstud
- 25 cage nuts and screw
- Rear panel section supplied with hinges